Cover Page

ECE 492 Seamless Physiological Monitoring Proposal

Prepared for:

Professor Nathalia Peixoto

Prepared by:

Saad Abdullah
Moneeb Ahmad
Aayush Aryal
Priyam Das
Ryan Gunawan
Muhammed Jamil Rahman

I. Executive Summary

With the advancement of technology, the necessity for maintaining a stable psychological health has increased exponentially. One of the most common hobbies that the newer generation participates in is playing video games. Although indulging in a hobby is great, many of today's gamers are spending a huge chunk of their time gaming in order to entertain themselves. This comes at a price as spending a lot of time on gaming can cause potential health hazards. To mitigate these problems, we are developing a device that will help gamers monitor themselves both psychologically and physically while they are gaming. The device will record the user's stress level, heart rate, body temperature and wrist movement. The device will contain sensors as well as a microcontroller in order to monitor and analyze the health of the user and alert them if it notices any hazardous behavior. This data will also be seamlessly uploaded in a cloud based dashboard for off-site monitoring. The user can then go back and check what needs to be done so that the experience of gaming can be a pleasant one. The device will also include an LCD screen where a user can see the information of their health in real time.

II. Problem Statement

Motivations:

It is easy for someone to get hooked onto a certain activity or hobby that they participate in for entertainment or for stress alleviation. Gaming can be a fun and an addictive hobby, however, it can sometimes be hard for a gamer to know when to quit playing. The amount of time a gamer spends playing video games has steadily increased, from 5.1 h/week in 2011 to 6.5 h/week in 2017 (von der Heiden et al., 2019). This extended period of gaming can be detrimental to a gamers psychological well-being as well as causing issues with their health. In the DSM-5,

the American Psychiatric Association defined Internet Gaming Disorder with diagnostic criteria closely related to Gambling Disorder (von der Heiden et al., 2019). As for physical health, extended gaming can cause major repercussions such as Carpal Tunnel Syndrome (CTS). CTS is an instance of pain, numbness, and/or tingling that occurs as a result of this nerve being pinched, squeezed, or compressed (National Institute of Neurological Disorders and Stroke). Most often, CTS will arise due to a series of repetitive movements performed over a long period of time, for example, a gamer typing on a keyboard or button-mashing a controller. As gaming continues to grow in popularity these physical and psychological issues that are associated with long gaming sessions will continue to arise in frequency. In order to mitigate these issues we plan on creating a device that will be used to monitor a gamers psychological and physical health while they are gaming. If the device detects any health issues that are arising in the gamers, then the device will send an alert to the user letting them know to take a break from their gaming session. With the implementation of this device, a gamer can continue to enjoy their hobby while also retaining their psychological and physical health.

Identification of Need:

This Seamless Physiological Monitoring product will constantly monitor and measure a user's mental and physical health while they are gaming for an extended period of time. The device will record a user's stress level, heart rate, body temperature, movement and alert them if their levels are high. The data that is being recorded from a user will also be uploaded to a cloud-based dashboard for off-site monitoring. The data will also be displayed to the user through an LCD screen where they can cycle through their different measurements in real time.

Market/Application Review:

This Seamless Physiological Monitoring device will be marketed towards individuals who want to keep track of their mental and physical health while they game over an extended period. With the assistance of this device, an individual can be alerted when their stress and heart rate levels have risen over an extended period of time. The user can then determine whether they want to take a break from their gaming session. This device will also alert users if their wrist movement is sporadic, suggesting that they lower their wrist movement rate in order to avoid obtaining CTS. Also, this device will measure a user's body temperature and alert them if it goes over a certain threshold. Once the threshold is obtained the device will suggest the user to take a break from their gaming session as well as informing them to rehydrate. By taking constant breaks and rehydrating, a user can uphold their mental and physical health while they game over an extended period of time. Although there are many products that can measure a user's stress level and heart rate; there aren't many devices that are commonly known that can measure all the critreas listed above. By producing this product we are encouraging the gaming community to keep better track of their psychological and physical health while still enjoying their favorite pastime.

III. Approach

Problem Analysis

With an increase in weekly time gaming, a gamer can start to notice that their physical and psychological health are deteriorating over time. In order for them to continue enjoying their hobby we plan on creating a Physiological Monitoring Wrist Device that can measure their health while they are gaming. In order for the user to correctly use this device, they have to

power it up and put it on their wrist.. While the user is in their normal gaming session, the sensors on the device will measure the user's heartbeat, temperature, stress levels and wrist movements. The data measured is then sent back to the device and processed. The processed data is then displayed to the user as well as stored on a cloud based service like Azure.

Approach

The Physiological Monitoring Wrist Device that we are trying to build will require multiple sensors as well as a MCU in order to accurately monitor and record a user's heart rate, stress level, body temperature, and wrist movement. In order to properly measure a user's heart rate a Reflection-Type Pulse sensor will be placed on the bottom of the Physiological Device facing towards a user's wrist. The Reflection-type pulse sensors will emit an infrared light onto a user wrist and measure the amount of light reflected off it using a phototransistor. Oxygenated hemoglobin present in the blood of the arteries has the characteristic of absorbing incident light, so by sensing the blood flow rate that changes following heart contractions over time we are able to obtain a pulse wave signal which shows the users heart rate.

The Reflection-Type Pulse sensor will also be used in order to measure a user's stress level while they are gaming. In order to determine the stress level of the user we will use the Pulse sensor to calculate their Heart Rate Variability (HRV). The HRV is the key in determining the health of the cardiovascular system. A High deviation in a user's HRV is associated with better heart wellness and HRV could also be used as a means to determine moods (Farnsworth). A smaller HRV value could be associated with arousing psychological conditions such as stress (Kim, H., Cheon). A user's HRV can be calculated either in the time domain or the frequency domain. The time domain calculation uses the bpm data that was already taken, and the time difference between heartbeats. Using the formula highlighted in figure 1 the N value depends on

how many samples we take and j is the value we start with. RR is the distance (in milliseconds) between the heartbeats. When stressed, a user's HRV value becomes near 0, due to the heart rate surpassing their normal value (Hoffman [12]). If a user's HRV level is consistently low over an extended period of time the device will alert the user advising them to take a break from their gaming session in order to reduce their stress level.

$$HRV = STD\,RR = \sqrt{1/(N-1)\sum_{j=1}^{N}(RR_j - \overline{RR})^2}$$

Figure 1: The formula used for computing the standard deviation of RR intervals

In order to measure a user's wrist movements an accelerometer will be placed inside of the Physiological Device. The accelerometer will measure the wrist's x,y, and z positions. By finding the differences in position at one instance of time to another we can find velocity and the acceleration of a user's wrist. By obtaining the acceleration we can then see how fast a user is moving their wrist at any given moment. Once the accelerometer detects that a user has passed a certain acceleration rate the device will alert the user to slow down their wrist movement. With the deceleration of their wrist a user can lower their chances of obtaining CTS while gaming.

We will also be using a human body temperature sensor to accurately measure the body temperature of the user while they are gaming. Once their temperature reaches a certain threshold the device will alert the user of their temperature and advise them to take a break from gaming as well as reminding them to rehydrate. The sensor converts temperature measurements to digital form using a high-resolution, sigma-delta, analog-to-digital converter (ADC). The I2C serial interface accepts standard write byte, read byte, send byte, and receive byte commands to read the temperature data and configure the behavior of the open-drain over temperature shutdown output. The sensor has a 2.7V to 3.3V supply voltage range, low 600µA supply current, and a lockup-protected I2C-compatible interface.

The sensors that are identified above will be connected to and controlled by an MSP430 microcontroller. This board was chosen because it contains an I2C bus which is necessary for the data collection which is obtained from the body temperature sensor as well as the accelerometer. This board is also inexpensive which is very crucial to our project since our budget is set at $600. Another reason this microcontroller was chosen was because it is easy to integrate an LCD screen onto the board which will display a user's health data while they are gaming. Users will have a button input on the device where they can switch between the different modes that displays their psychological and physical health while they are gaming. An Espressif Crowtail Serial WiFi module will also be connected to the MSP430 in order to provide the Physiological Monitoring Wrist Device with wifi capabilities. This is an important feature because the data that will be collected from the user by the device will be offloaded into a cloud based storage system. Storing a user's data in the cloud is a useful feature because it makes it easier for them to keep track and monitor their psychological and physical health over time. By looking at past data a user can determine if they need to take more breaks in their gaming sessions.

Alternative Approaches

The Physiological Monitoring Device that we are trying to build will be a wrist device; however, if the device is too bulky we will move the device up to the user's forearm in order to measure their psychological and physical health while they're gaming. Another alternative approach that we have prepared for is soldering a usb port onto the MSP430 in order to connect a Cudy AC Wifi USB which will provide our device with wifi capabilities. We also have a backup plan where we will place a scroll wheel onto the device in order for a user to cycle through the different modes in order to see their health while gaming.

Background:

Stress level and emotions influence the activity of the heart. According to Hagshenag [2], the heart activity is influenced by ANS (Autonomic Nervous System) and SNS (Sympathetic Nervous System). Playing games influences the mental state which is enforced by Hagshenag in her research. Hagshenag [2] states, "In order to compare the three states; fear, excitement and calmness, it can be said that in the time of horror and excitement, with the increase of sympathetic nervous activity, the width of the Poincare plot decreases and with the increase of parasympathetic nervous activity in relaxation, the width of the Poincare chart is increased". In other words, fear and excitement influence the heart rate because the signal that is sampled is fluctuating Hagshenag [2]. The way these emotions influence the heart rate is different. Panic increases the heart rate more than excitement and fear. These emotions increase the SNS and decrease the Lyapunov exponent [2]. In the study done by Porter and Goolkasian [2] it showed that players who felt they were in a threatened or challenging state showed more "sympathetic activity" , SNS, which means a higher heart rate, and a lower HRV value.

During a long gaming session, a user's heart rate can increase for a long period of time causing them to sweat in order to dissipate some of the heat from their body temperature. With this increase of sweat a gamer can find themselves to be discombobulated due to the fact that they are dehydrated. When a user becomes severely dehydrated, their blood pressure can drop significantly due to them not receiving enough oxygen. In order for a user to avoid this issue our psychological device will read their surface body temperature and once it pases a certain threshold it will remind the user to take a break from their session and to rehydrate.

Project Requirements Specifications

Mission Requirements

- The device shall measure the physical and mental health of gamers.

Operational Requirements

- Input/output requirements
    - The device will have multiple sensors on in order to calculate a user's symptoms and display it onto a simple LCD screen.
    - The device shall accept an input from a user through a push button in order to allow users to cycle between different monitoring sections on the LCD screen.
    - Data will be stored onto a cloud system.
- External Interface requirements
    - The deceive will be battery powered.
- Functional Requirements
    - The device will use the sensors to collect a user's symptoms every 10 milliseconds.
    - The device should detect errors and provide visual notification.
    - The device will alert the user if their stress level, heart rate, body temperature, or wrist movement is at a high rate for an extended period of time.
- Technology and System-wide requirements
    - The cloud storage system that will be used for this project is Azure.
    - The program languages that will be used for this project are C and Python.
    - The sensors that will be used in this project are: Reflection-Type Heart Sensor, Accelerator, Temperature Sensor.

- The Microcontroller that will be used for this project is a MSP430-EXP430G2ET.
- An LCD display as well as a wifi card will be used in this project.
- The buses that will be used in this project will be I2C and UART.
- The cost for this project will be less than $600
- The power requirements for this project will be less than 15 volts.

IV. System Design

Functional Decomposition

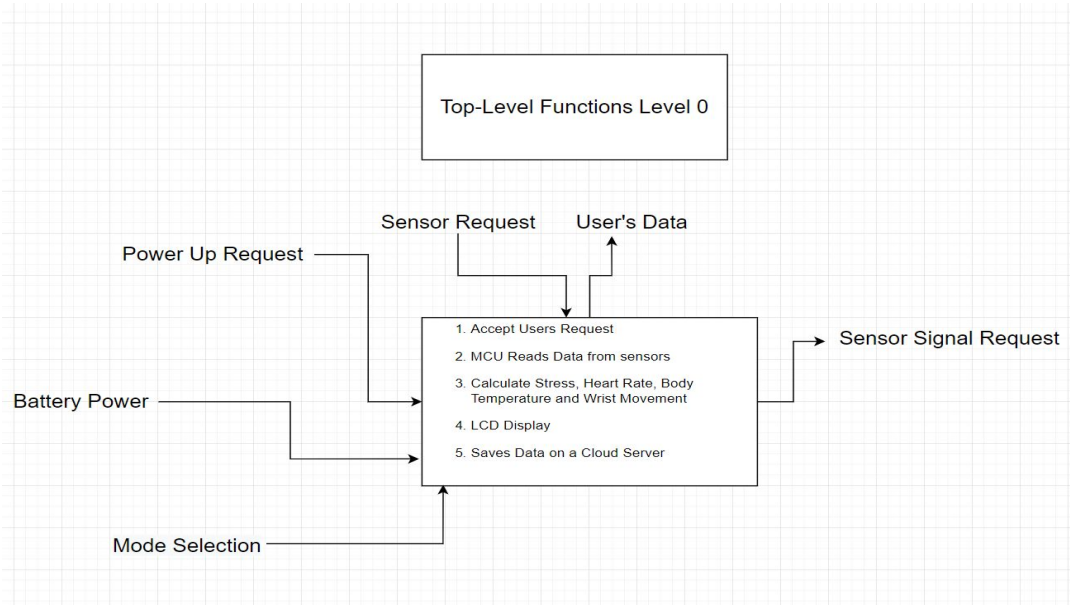

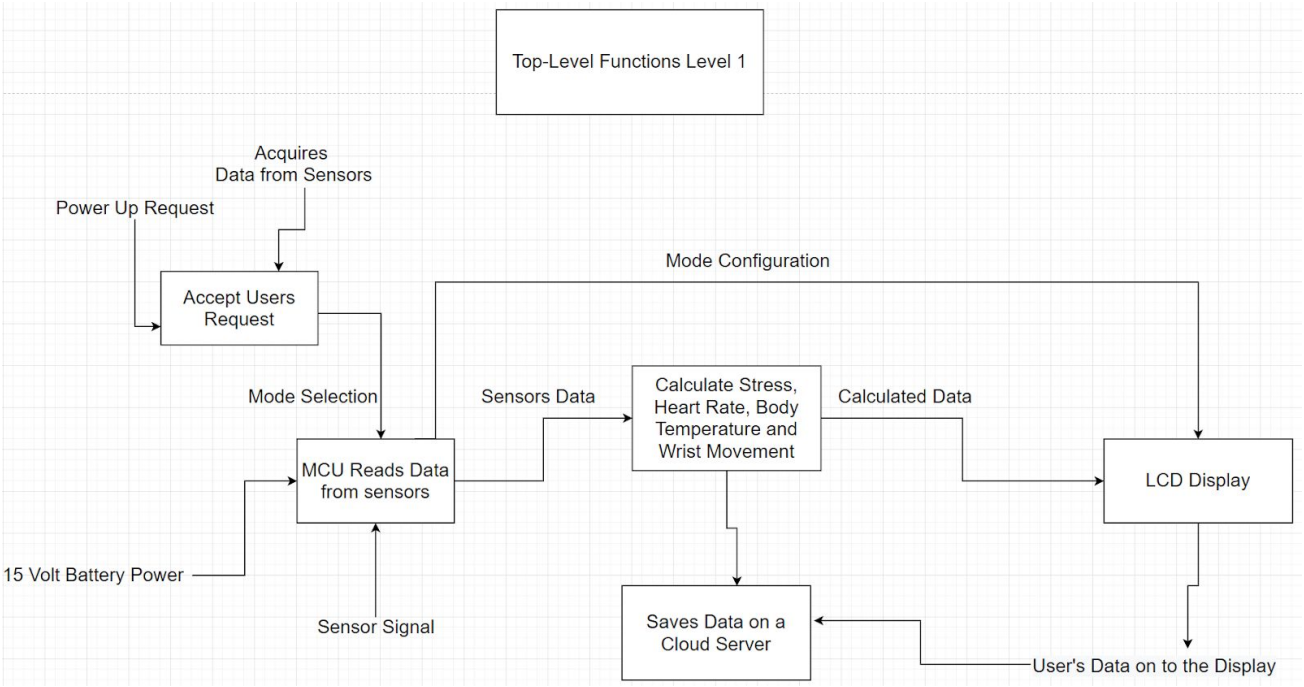
Top-Level Functions Level 1
Acquires
Data from Sensors
Power Up Request
Accept Users
Request
Mode Configuration
Mode Selection
Sensors Data
Calculate Stress,
Heart Rate, Body
Temperature and
Wrist Movement
Calculated Data
MCU Reads Data
from sensors
LCD Display
15 Volt Battery Power
Sensor Signal
Saves Data on a
Cloud Server
User's Data on to the Display

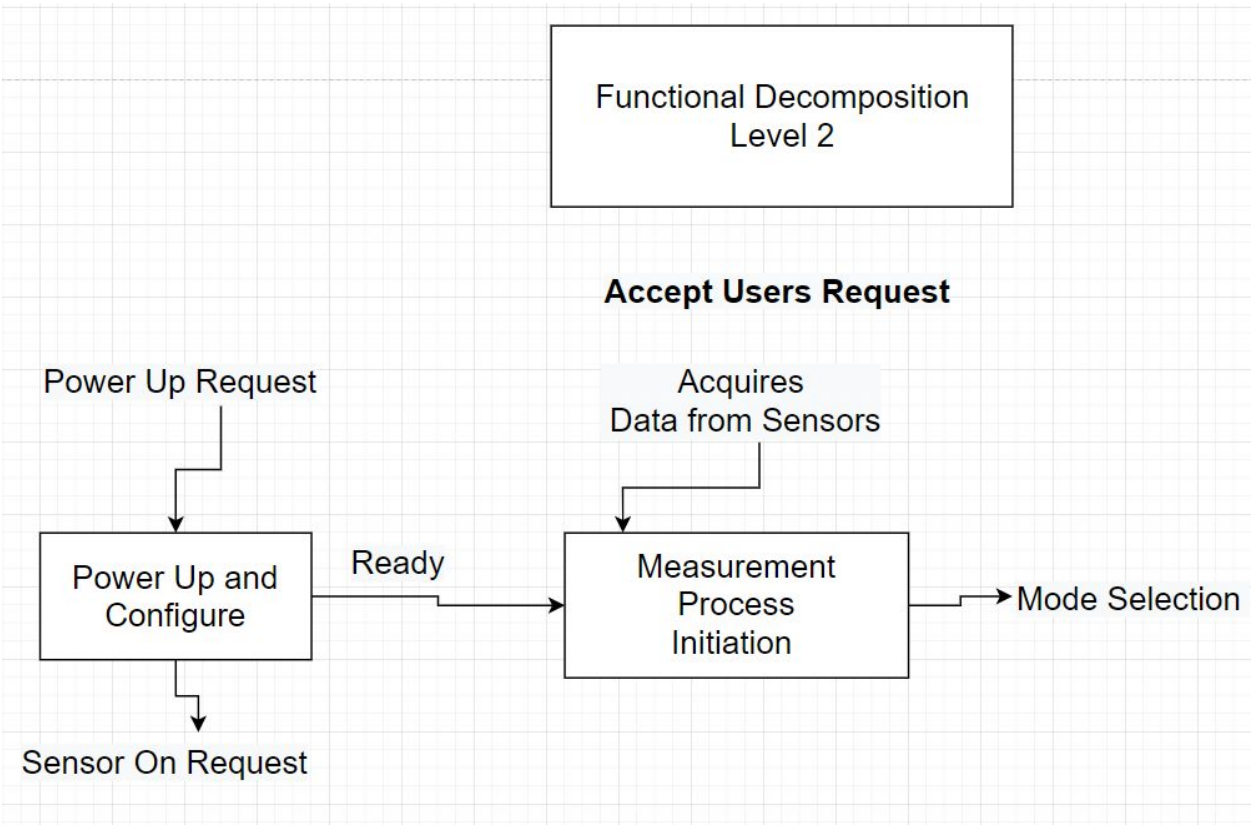
Functional Decomposition
Level 2
Accept Users Request
Power Up Request
Acquires
Data from Sensors
Power Up and
Configure
Ready
Measurement
Process
Initiation
Mode Selection
Sensor On Request

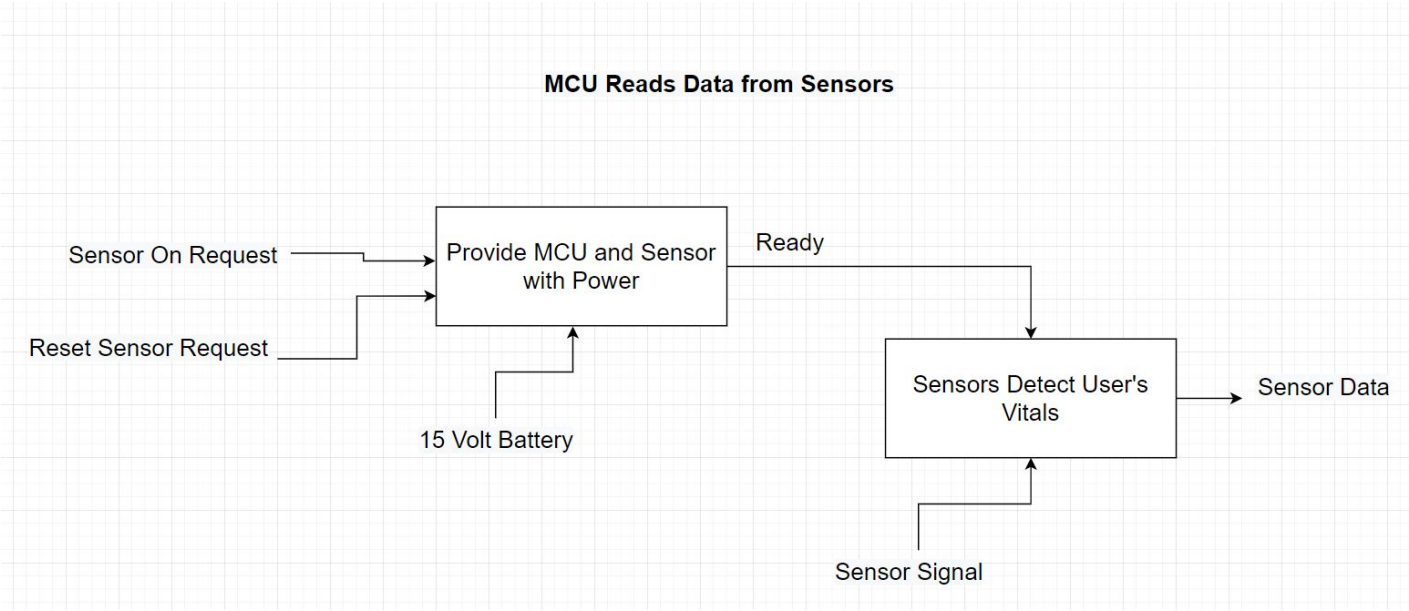
MCU Reads Data from Sensors
Sensor On Request
Reset Sensor Request
Provide MCU and Sensor with Power
15 Volt Battery
Ready
Sensors Detect User's Vitals
Sensor Signal
Sensor Data

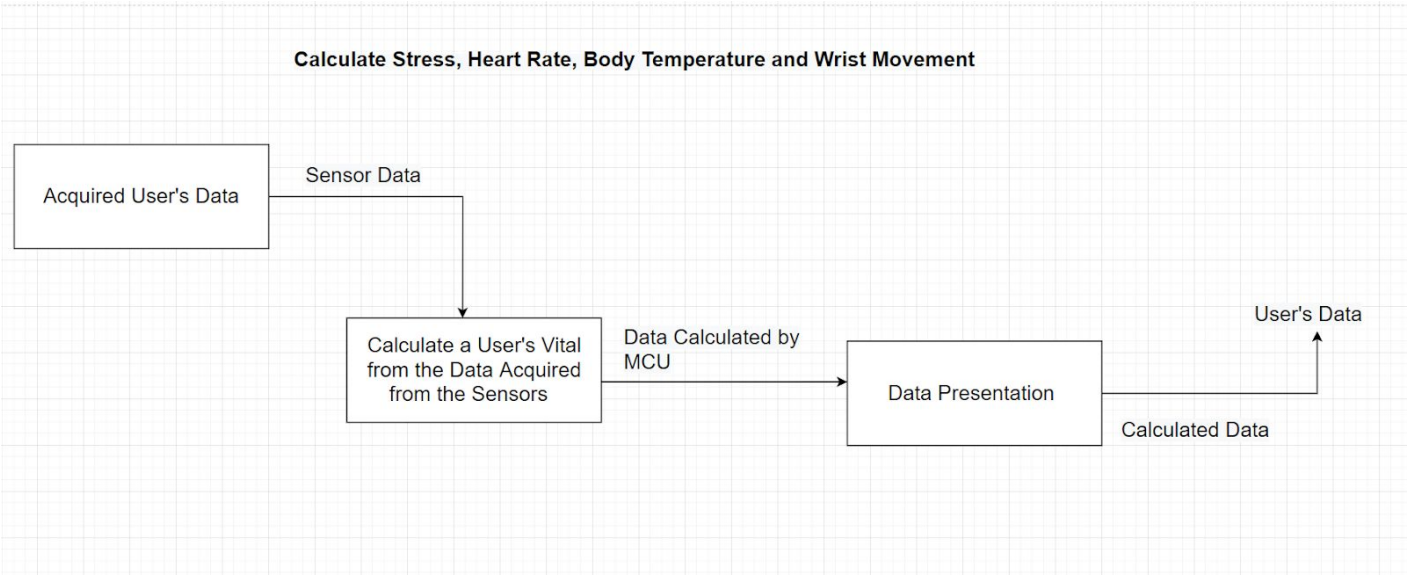
Calculate Stress, Heart Rate, Body Temperature and Wrist Movement
Acquired User's Data
Sensor Data
Calculate a User's Vital from the Data Acquired from the Sensors
Data Calculated by MCU
Data Presentation
Calculated Data
User's Data

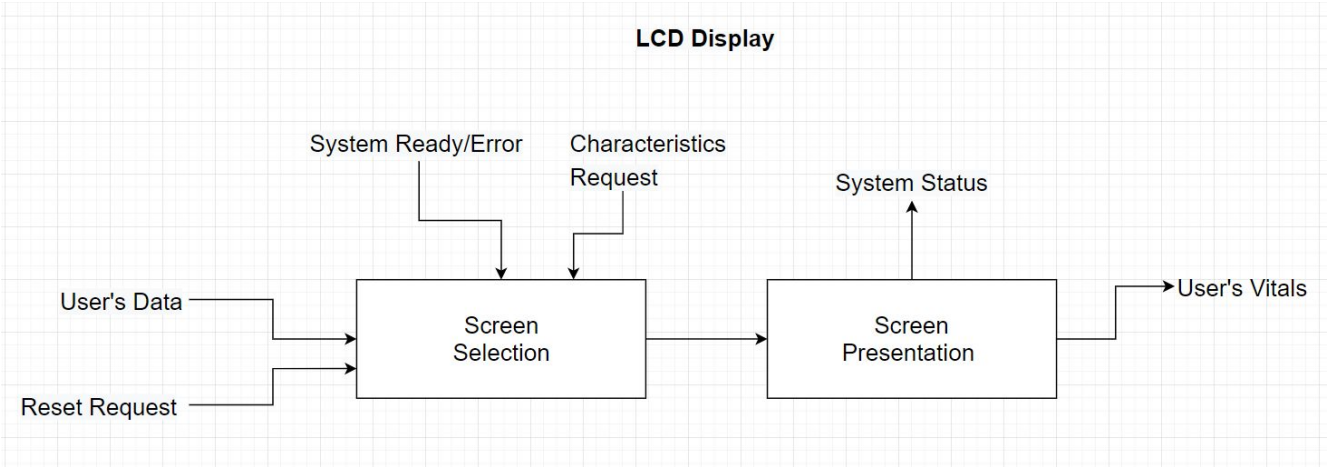

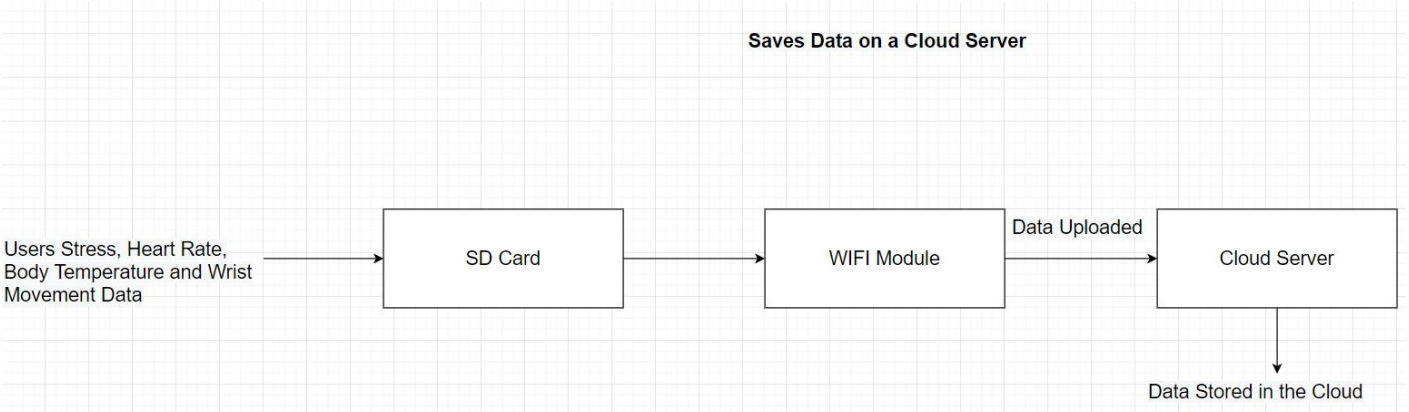

Generic Physical Architecture

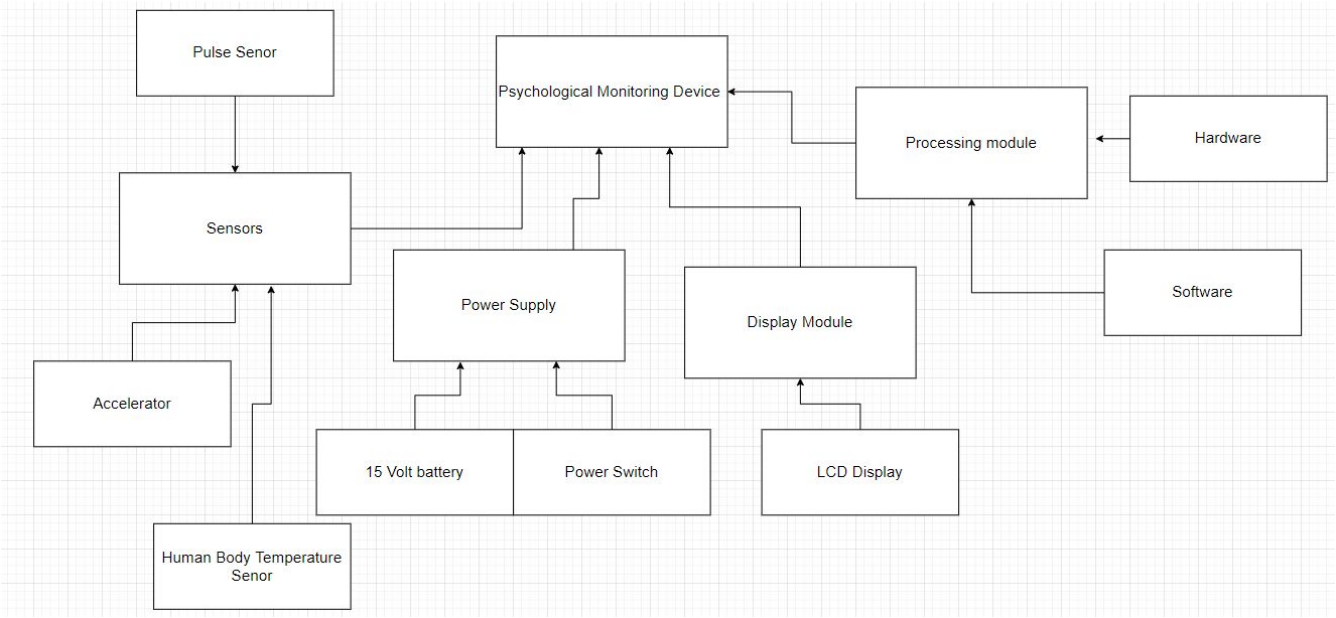

System Architecture

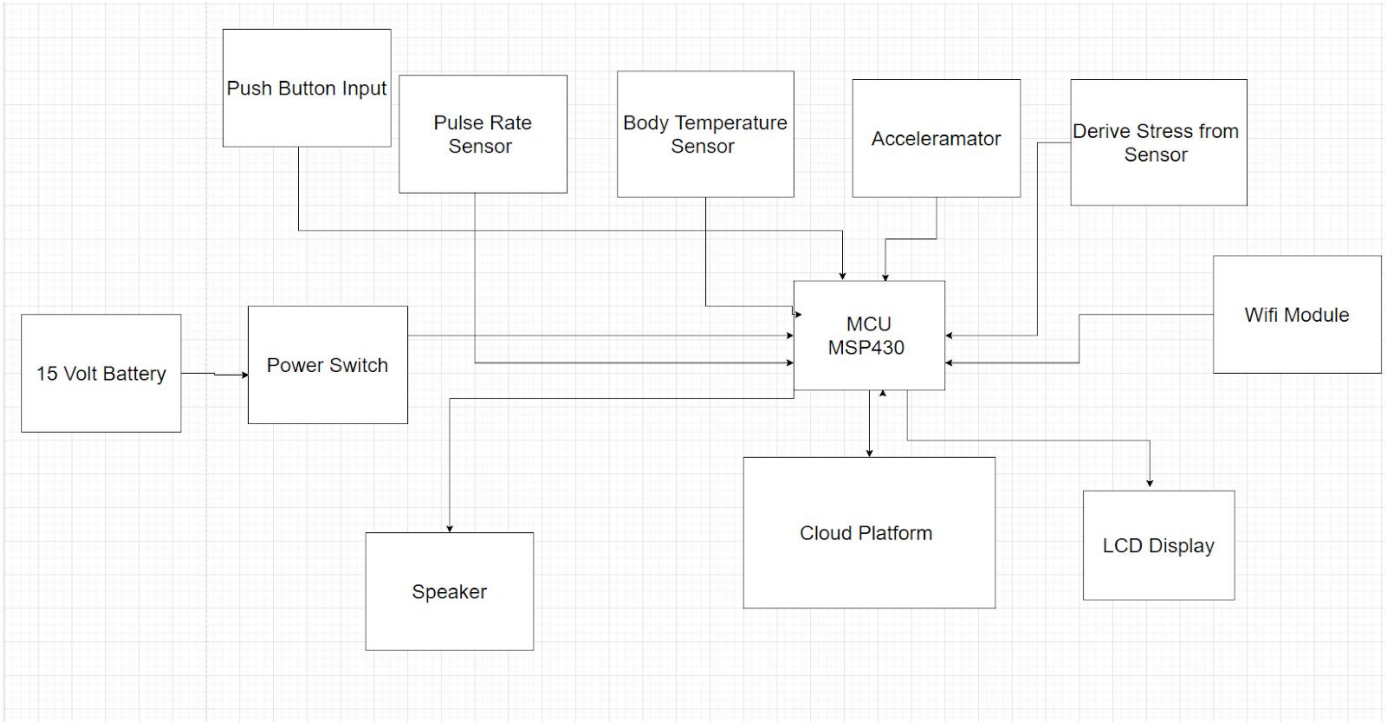

V. Preliminary Experimental Plan

This project contains sensors, a power supply, an LCD display and microcontroller. There will be two experiments to test the readiness of the final product: operational requirement evaluation and functional requirement evaluation.

Experiment 1 (Operational Requirement Evaluation):

Goal: To evaluate a user's input and selection using a push button

System Components: LCD, Sensors and Push Button

Testing Process: A user can select through different modes on the Psychological device by clicking on a button in order to see their health data while gaming. The user will be able to click on the button multiple times in order to see the different reading that the device is displaying.

Evaluation: We will verify that once a user pushes the button the LCD on the device it has changed modes in a proper cycle.

Experiment 2 (Functional Requirement Evaluation):

Goal: To evaluate measurements of a user's: stress level, heart rate, body temperature, and wrist movement.

System Components: Sensors, Microcontroller.

Testing Process: We will be using the sensors that are encased in the device in order to measure a users physical and psychological health while they are gaming. The Microcontroller will convert the data that is collected from the sensors into readable data that the user can view.

Evaluation: We will verify that the data that is being collected from the sensor is accurate by using 3rd party health equipment (ie; apple watch) in order to measure a user's health and then compare it to our device reading. This test process will be conducted multiple times in order to assure that the Psychological device that we are creating is consistently outputting the correct information about a user's health.

VI. Preliminary Project Plan

Task	Start Date	End Date	Duration (weeks)
1. Hardware development	10/12/2020	11/2/2020	
1.1 Order Parts	10/12/2020	10/19/2020	1
1.2 Sensor Setup	10/19/2020	10/26/2020	1
1.3 Create Enclousure	10/26/2020	11/2/2020	1
1.4 Circuit Design	10/26/2020	11/2/2020	1
1.5 Circuit Assembly	10/26/2020	11/2/2020	1
2. Software Setup	11/2/2020	11/16/2020	2
2.1 Sensor Calibration	11/2/2020	11/9/2020	1
2.2 LCD Calibration	11/2/2020	11/9/2020	1
2.3 Wifi Module Check	11/9/2020	11/16/2020	1
2.4 Data Server Setup	11/9/2020	11/16/2020	1
3. Software Design	11/16/2020	12/22/2020	5
3.1 Heartrate + HRV Mode	11/16/2020	11/23/2020	1
3.2 Body Tempature Mode	11/23/2020	12/6/2020	1
3.3 Wrist Movement Mode	11/23/2020	12/6/2020	1
3.4 Data Output to LCD	12/15/2020	12/22/2020	1
3.5 Data Output to Server	12/15/2020	12/22/2020	1
4. System Integration	12/22/2020	12/31/2020	1
4.1 initialize Setup	12/22/2020	12/23/2020	1 Day
4.2 Mode Selction	12/23/2020	12/24/2020	1 Day
4.3 Sensor Functionality	12/24/2020	12/25/2020	1 Day
4.4 Calcution Functionality	12/25/2020	12/26/2020	1 Day
4.5 Display Functionality	12/26/2020	12/27/2020	1 Day
4.6 Server Functionality	12/28/2020	12/31/2020	3 Days
5. Testing	1/1/2021	2/1/2021	4
6.1 Experiment #1	1/1/2021	1/15/2021	2
6.2 Experiment #2	1/16/2021	2/1/2021	2
6. Reporting	2/1/2021	3/1/2021	4
6.1 Progess Report	2/1/2021	2/8/2021	1
6.2 In-Progess Report	2/9/2021	2/15/2021	1
6.3 Final Report	2/16/2021	2/23/2021	1
6.4 Poster	2/23/2021	3/1/2021	1
8. Milestones/Demos	4/1/2021	5/1/2021	4
8.1 Demo #1	4/1/2021	4/10/2021	1
8.2 Demo #2	4/10/2021	4/17/2021	1
8.3 Demo #3	4/17/2021	5/1/2021	2

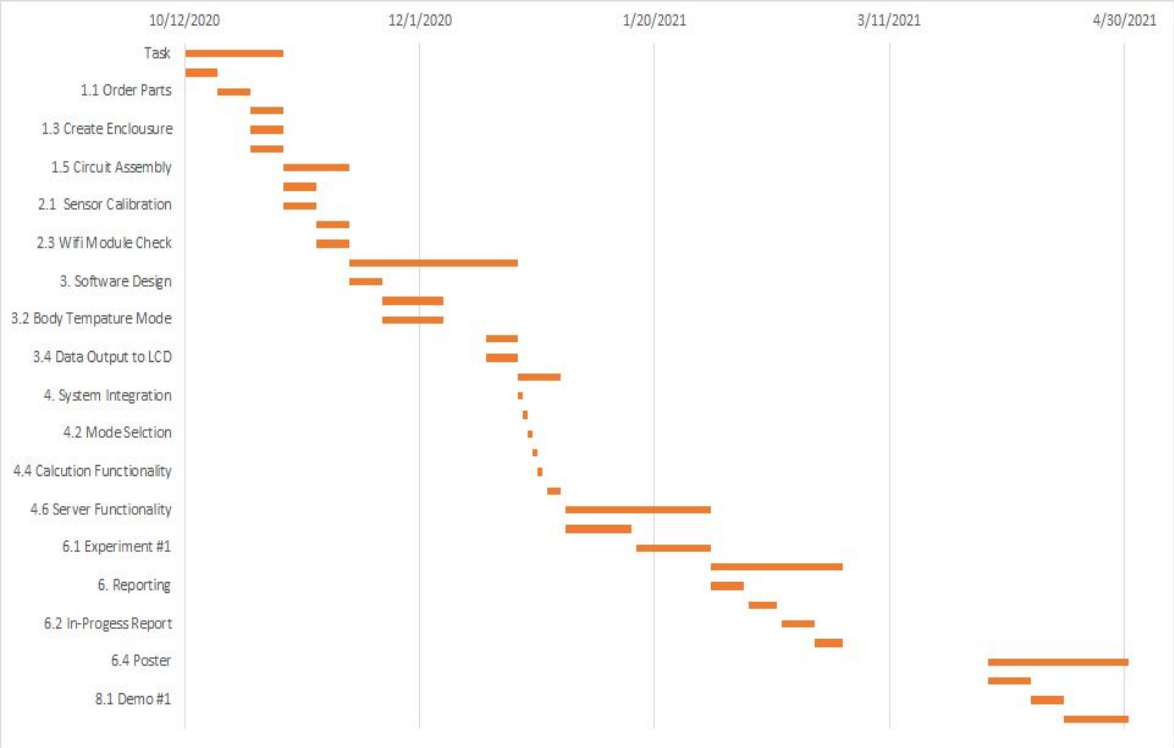

VII. Potential Problems

This project will contain a collection of sensors that will be regulated by an MSP430 microcontroller. The data of the user's vital will be gathered by the sensors and the output readings would be processed in the microcontroller. A potential problem that could occur in this project would be issues that would arise during the programming session. Since we are using an MSP430 microcontroller the main programming languages that will be used in this project are going to be C and Python. We will be mostly relying on program libraries in order to control our microcontroller, however there is a good possibility that we will have to code a lot of the functions ourselves. Because of this there will be a lot of debugging that will need to be done in order for us to control our device the way we intend it to work.

Another potential problem that can occur during this project is issues arising from the wiring and sensor placement on the microcontroller. We have to determine the type of terminal we are using and integrate them inside the MSP430. When the sensors are integrated and the users data has been collected, we will also have to write an algorithm that can calculate the data and produce outputs using the appropriate method that we learned. The final potential problem that can occur during development of this project is that the connection between the sensors and the microcontroller would be terminated if the user's movement makes the sensors fall out of place.

We will need to find a way to properly ensure that all the parts of the device are properly secured in order to assure that this problem doesn’t occur.

VIII. References

[1] J. M. von der Heiden, B. Braun, K. W. Müller, and B. Egloff, “The Association Between Video Gaming and Psychological Functioning,” *Frontiers in psychology*, 26-Jul-2019. [Online]. Available: https://www.ncbi.nlm.nih.gov/pmc/articles/PMC6676913/.

[2] L. Haghshenas and M. Pooyan, "Investigating the Effect of Computer Games on the Heart Signal," 2019 27th Iranian Conference on Electrical Engineering (ICEE), Yazd, Iran, 2019, pp. 1775-1778, doi: 10.1109/IranianCEE.2019.8786686.

[3] “Heart Rate Variability - How to Analyze ECG Data,” *imotions*. https://imotions.com/blog/heart-rate-variability/.

[4] J. Hughes and F. Iida, “Multi-Functional Soft Strain Sensors for Wearable Physiological Monitoring,” *Sensors (Basel)*, vol. 18, no. 11, Nov. 2018, doi: 10.3390/s18113822.

[5]“Pulse sensor | Electronics Basics | ROHM.” https://www.rohm.com/electronics-basics/sensor/pulse-sensor#:~:text=First%2C%20there%20are%20four%20main,sensors%20use%20the%20photoelectric%20method.

[6]M. Salai, I. Vassányi, and I. Kósa, “Stress Detection Using Low Cost Heart Rate Sensors,” *Journal of Healthcare Engineering*, vol. 2016, p. 5136705, Jun. 2016, doi: 10.1155/2016/5136705.

[7] J. M. von der Heiden, B. Braun, K. W. Müller, and B. Egloff, “The Association Between Video Gaming and Psychological Functioning,” *Front Psychol*, vol. 10, Jul. 2019, doi: 10.3389/fpsyg.2019.01731.

[8] A. M. Porter and P. Goolkasian, "Video Games and Stress: How Stress Appraisals and Game Content Affect Cardiovascular and Emotion Outcomes," *Front. Psychol.*, vol. 10, 2019, doi: 10.3389/fpsyg.2019.00967.

[9] B. Huang *et al.*, "Wearable Stretch Sensors for Motion Measurement of the Wrist Joint Based on Dielectric Elastomers," *Sensors (Basel)*, vol. 17, no. 12, Nov. 2017, doi: 10.3390/s17122708.

[10] "Carpal Tunnel Syndrome Fact Sheet," *National Institute of Neurological Disorders and Stroke*. [Online]. Available: https://www.ninds.nih.gov/Disorders/Patient-Caregiver-Education/Fact-Sheets/Carpal-Tunnel-Syndrome-Fact-Sheet. [Accessed: 02-Oct-2020].

[11] Kim, H., Cheon, E., Bai, D., Lee, Y. and Koo, B., 2018. Stress and Heart Rate Variability: A Meta-Analysis and Review of the Literature. *Psychiatry Investigation*, 15(3), pp.235-245.

[12] T. Hoffman Exercise Physiologist & Master Trainer, "What is Heart Rate Variability (HRV) & why does it matter?: Firstbeat Blog," *Firstbeat*, 18-Aug-2020. [Online]. Available: https://www.firstbeat.com/en/blog/what-is-heart-rate-variability-hrv/. [Accessed: 02-Oct-2020].